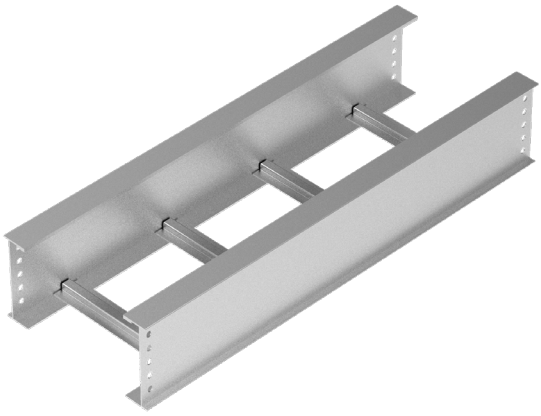

I-Beam

Stocked Ladder Tray

Type	Nema Load	Tray Type	Side Rail	Length	Width	Fitting Type	Fittings (VI & VO 90's)	Horizontal 90's
Flange In	12A	A9IJA1	4"	12'	12" & 24"	ALIJA1	24" Radius	24" Radius
I-Beam	12C	A9IJC	4 1/2"	12'	12", 18", 24"& 36"	ALIJC	24" Radius	24" Radius
	20C	A9IJC5	5"	20"	12", 18", 24"& 36"	ALIJC5	12" Radius	12" Radius
	12C	A9IMC	6"	12'	12", 18", 24"& 36"	ALIMC	24" Radius	24" Radius
	20C	A9IXC	6"	20'	12", 18", 24"& 36"	ALIXC	24" Radius	24" Radius

1-50 STRAIGHTS UP TO 10 FITTINGS	48 HOURS
50-75 STRAIGHTS UP TO 20 FITTINGS	3-5 BUSINESS DAYS
75-100 STRAIGHTS UP TO 20 FITTINGS	7-10 BUSINESS DAYS

Tee Kits-Up to 50	LEAD TIMES DIRECTED BY STRAIGHT SECTION QUANTITIES
Cross Kits-Up to 25	

EASYCONNECT®

BASKET TRAY

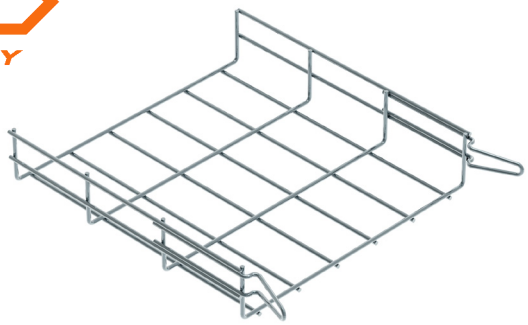

Ships in: 24 HOURS

Material	Part Number	Height	Width
Zinc	WBS22-"W"-3M-EZ	2"	2", 4", 6", 8", 12" & 24"
	WBS24-"W"-3M-EZ	4"	4", 6", 8", 12", 18" & 24"
	WBS26-"W"-3M-EZ	6"	8", 12", 18", 24" & 36"
Stainless Steel	WBS22-"W"-3M-4S-EZ	2"	2", 4", 6", 8", 12" & 24"